Published: 11-May-2011

Side Panel Sheet Metal Repairs - Rocker Panel

Removal and Installation

Removal

1. Load vehicle onto ramp.
2. Disconnect both battery cables.
   For additional information, refer to: Specifications (414-00 Battery and Charging System - General Information, Specifications).
3. Remove the rear wheel and tire.
4. Remove the rear fender splash shield.
5. Remove the front fender.
   For additional information, refer to: Fender (501-02 Front End Body Panels, Removal and Installation).
6. Release the front door check strap from the A-pillar and release the rear door check strap from the B-pillar.
   - Remove the 2 Torx bolts.

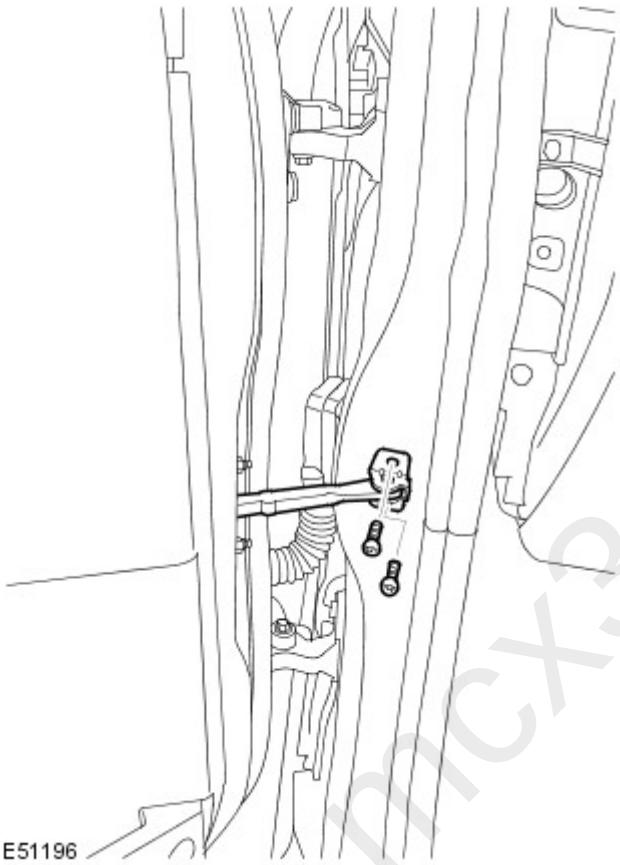

mcx30.com

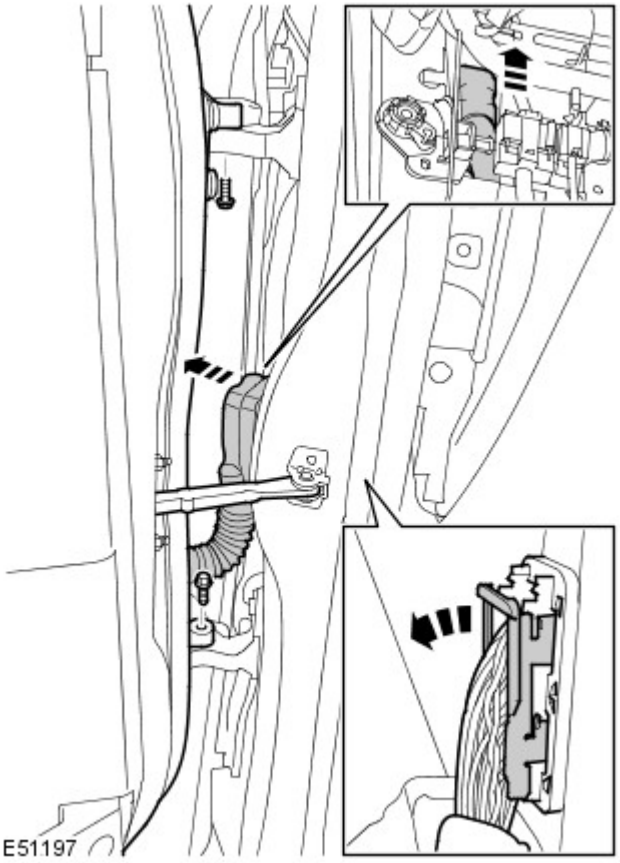

7. Remove the front and rear door assemblies.

- Disconnect the electrical connector
- Release the wiring harness grommet
- Release the wiring harness retaining clip
- Remove the 2 bolts

8. Remove the front and rear door weatherstrips.

9. Remove the front seat.
For additional information, refer to: Front Seat (501-10 Seating, Removal and Installation).

10. Remove the rear seat.
For additional information, refer to: Rear Seat - Vehicles With: 60/40 Split Seat (501-10 Seating, Removal and Installation).

11. Remove the cowl side trim panel.
For additional information, refer to: Cowl Side Trim Panel (501-05 Interior Trim and Ornamentation, Removal and Installation).

12. Release the wiring harness from A-pillar.

13. Remove the front safety belt retractor.
For additional information, refer to: Front Safety Belt Retractor (501-20A Safety Belt System, Removal and Installation).

14. Remove the B-pillar side impact sensor.
For additional information, refer to: B-Pillar Side Impact Sensor (501-20B Supplemental Restraint System, Removal and Installation).

15. Remove the second row safety belt retractor.
For additional information, refer to: Second Row Safety Belt Retractor (501-20A Safety Belt System, Removal and Installation).

16. Remove the C-pillar side impact sensor.
For additional information, refer to: C-Pillar Side Impact Sensor (501-20B Supplemental Restraint System, Removal and Installation).

17. Release the rocker panel and B-pillar wiring harness.

18. Release the carpet away from the area of repair.

19. Release the wiring harness from rocker panel and B-pillar.

20. Remove the rocker panel finisher.

mcx30.com

21.

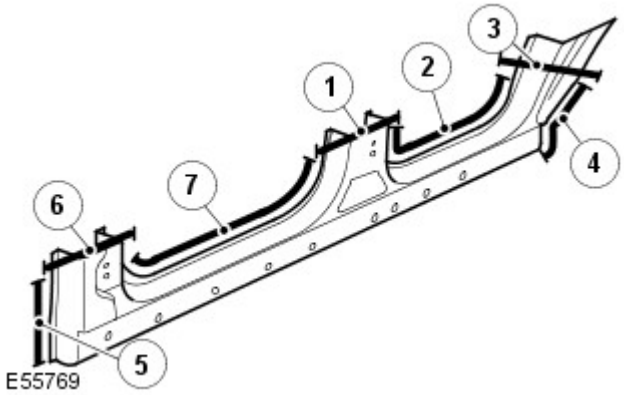

Item	Part Number	Description
1	-	Butt weld.
2	-	20 spot-welds.
3	-	Butt weld.
4	-	9 spot welds.
5	-	8 spot welds.
6	-	Butt weld.
7	-	35 spot welds.

mcx30.com

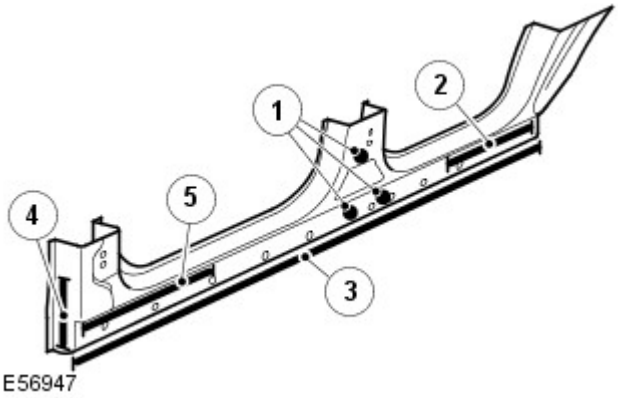

22.

Item	Part Number	Description
1	-	3 plug welds.
2	-	3 plug welds.
3	-	38 plug welds.
4	-	3 plug welds.
5	-	4 plug welds.

23. For additional information:

- Welding.
  For additional information, refer to: Body Repairs (501-25A Body Repairs - General Information, Description and Operation).
- Corrosion protection.
  For additional information, refer to: Corrosion Protection (501-25B Body Repairs - Corrosion Protection, Description and Operation).
- Tolerance checks.
  For additional information, refer to: Body and Frame (501-26 Body Repairs - Vehicle Specific Information and Tolerance Checks, Description and Operation).

Installation

1. Install is the reversal of removal.

mcx30.com

Published: 11-May-2011

Side Panel Sheet Metal Repairs - A-Pillar Outer Panel

Removal and Installation

Removal

1. Disconnect both battery cables.
   For additional information, refer to: Specifications (414-00 Battery and Charging System - General Information, Specifications).
2. Remove the windshield glass.
   For additional information, refer to: Windshield Glass (501-11 Glass, Frames and Mechanisms, Removal and Installation).
3. Remove the front fender.
   For additional information, refer to: Fender (501-02 Front End Body Panels, Removal and Installation).
4. L/H side: Remove the battery junction box.
   For additional information, refer to: Battery Junction Box (BJB) - TDV6 2.7L Diesel (418-00 Module Communications Network, Removal and Installation).
5. R/H side: Remove the ABS module.
   For additional information, refer to: Anti-Lock Brake System (ABS) Module (206-09A Anti-Lock Control - Traction Control, Removal and Installation).
6. R/H side: Remove the accelerator pedal.
   For additional information, refer to: Accelerator Pedal (310-02A Acceleration Control - TDV6 2.7L Diesel, Removal and Installation).
7. R/H side: Remove the brake booster.
   For additional information, refer to: Brake Booster (206-07, Removal and Installation).
8. Remove the front door assembly.
   - Disconnect the electrical connector
   - Release the wiring harness grommet
   - Release the wiring harness retaining clip
   - Remove the 2 bolts

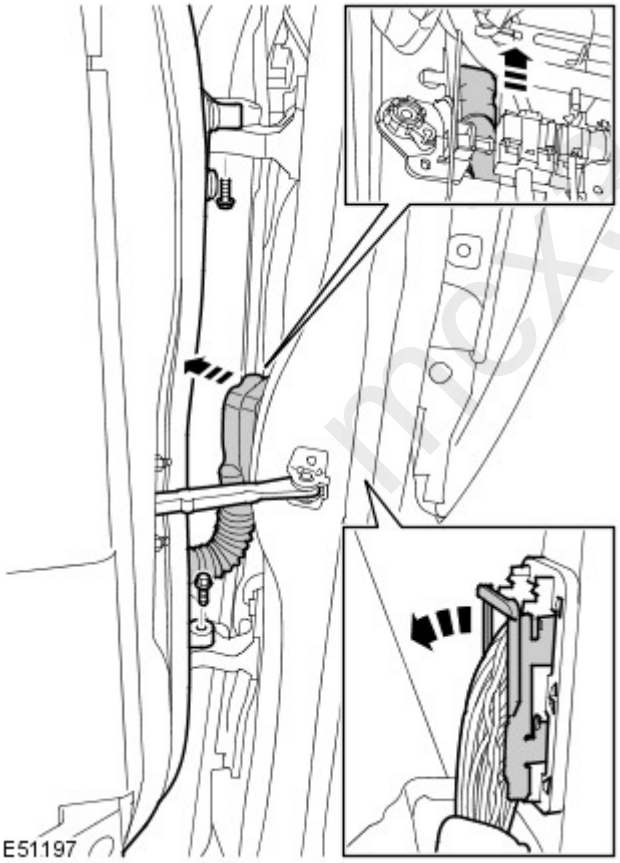

9. Remove the insulation from the outer and inner bulkhead.
10. Remove the front and rear door weatherstrip.
11. Remove the cowl side trim panel.
    For additional information, refer to: Cowl Side Trim Panel (501-05 Interior Trim and Ornamentation, Removal and Installation).
12. Release the A-Pillar wiring harness.
13. Remove the footrest.

14. Remove the front seat.
For additional information, refer to: Front Seat (501-10 Seating, Removal and Installation).

15. Remove the front safety belt retractor.
For additional information, refer to: Front Safety Belt Retractor (501-20A Safety Belt System, Removal and Installation).

16. Remove the rocker panel outer trim.

17. Release the front carpet.

18.

Item	Part Number	Description
A	-	Cut line 55mm (2.165 inches) from A-Pillar trim hole.
1	-	Butt welds.
2	-	30 spot welds.
3	-	8 spot welds.
4	-	15 spot welds.

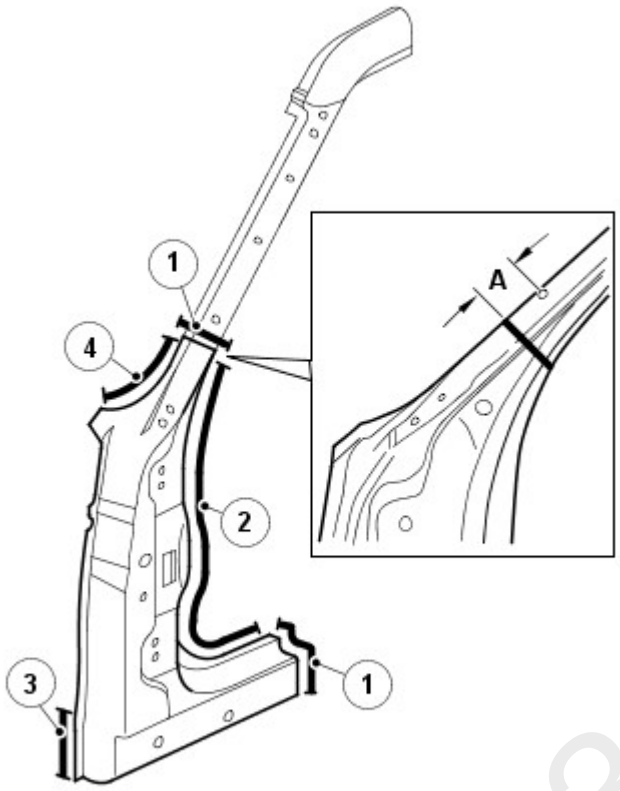

E55944

mcx30.com

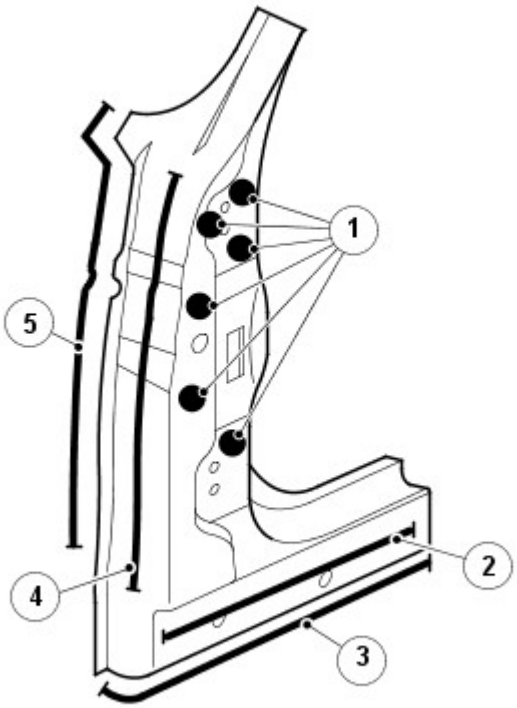

E57675

19.

Item	Part Number	Description
1	-	6 plug welds.
2	-	4 plug welds.
3	-	12 plug welds.
4	-	10 plug welds.
5	-	13 plug welds.

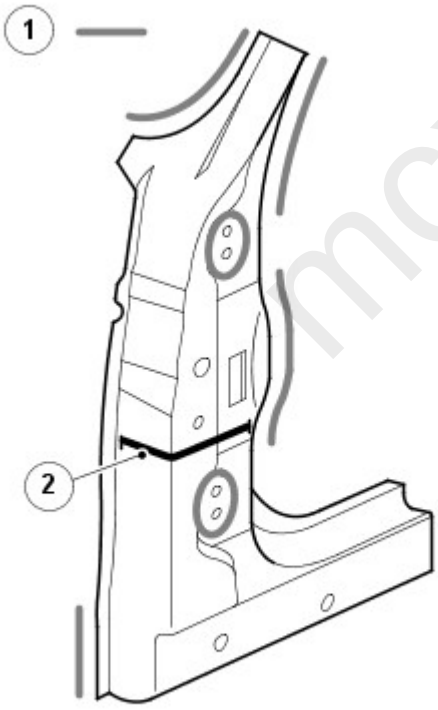

E57676

20.

Item	Part Number	Description
1	-	Areas of adhesive.
2	-	Acoustic seal.

21. For additional information:

- Welding.
  For additional information, refer to: Body Repairs (501-25A Body Repairs - General Information, Description and Operation).

mcx30.com

- Corrosion protection.
  For additional information, refer to: Corrosion Protection (501-25B Body Repairs - Corrosion Protection, Description and Operation).
- Tolerance checks.
  For additional information, refer to: Body and Frame (501-26 Body Repairs - Vehicle Specific Information and Tolerance Checks, Description and Operation).

Installation

1. Install is the reversal of removal.

mcx30.com

Published: 11-May-2011

Side Panel Sheet Metal Repairs - Side Panel

Removal and Installation

Removal

1. Load vehicle onto ramp.
2. Disconnect both battery cables.
   For additional information, refer to: Specifications (414-00 Battery and Charging System - General Information, Specifications).
3. Remove the windshield glass.
   For additional information, refer to: Windshield Glass (501-11 Glass, Frames and Mechanisms, Removal and Installation).
4. Remove the front fender.
   For additional information, refer to: Fender (501-02 Front End Body Panels, Removal and Installation).
5. Remove the front and rear door assemblies.
   - Disconnect the electrical connector
   - Release the wiring harness grommet
   - Release the wiring harness retaining clip
   - Remove the 2 bolts

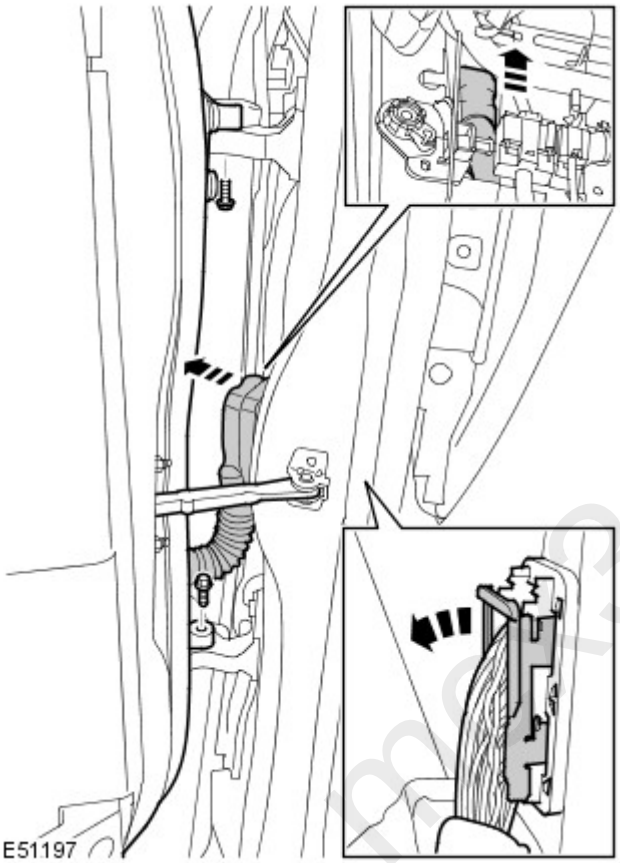

6. Remove front and rear door strikers.
7. Remove the insulation from the outer and inner bulkhead.
8. Remove the cowl side trim panel.
   For additional information, refer to: Cowl Side Trim Panel (501-05 Interior Trim and Ornamentation, Removal and Installation).
9. Release the A-Pillar wiring harness.
10. L/H side: Remove the battery junction box.
    For additional information, refer to: Battery Junction Box (BJB) - TDV6 2.7L Diesel (418-00 Module Communications Network, Removal and Installation).
11. R/H side: Remove the brake booster.
    For additional information, refer to: Brake Booster (206-07 Power Brake Actuation, Removal and Installation).
12. R/H side: Remove the ABS module.
    For additional information, refer to: Anti-Lock Brake System (ABS) Module (206-09A Anti-Lock Control - Traction Control, Removal and Installation).
13. R/H side: Remove the accelerator pedal.
    For additional information, refer to: Accelerator Pedal (310-02A Acceleration Control - TDV6 2.7L Diesel, Removal and Installation).

14. Remove the footrest.

15. Remove the front seat.
For additional information, refer to: Front Seat (501-10 Seating, Removal and Installation).

16. Remove the rear seat.
For additional information, refer to: Rear Seat - Vehicles With: 60/40 Split Seat (501-10 Seating, Removal and Installation).

17. Remove the front and rear door weatherstrip.

18. Remove the front safety belt retractor.
For additional information, refer to: Front Safety Belt Retractor (501-20A Safety Belt System, Removal and Installation).

19. Remove the Second row safety belt retractor.
For additional information, refer to: Second Row Center Safety Belt Retractor - Vehicles With: 60/40 Split Seat (501-20A Safety Belt System, Removal and Installation).

20. Remove the third row safety belt retractor.
For additional information, refer to: Third Row Safety Belt Retractor (501-20A Safety Belt System, Removal and Installation).

21. Remove the B-Pillar side impact sensor.
For additional information, refer to: B-Pillar Side Impact Sensor (501-20B Supplemental Restraint System, Removal and Installation).

22. Remove the side air curtain module.
For additional information, refer to: Side Air Curtain Module (501-20B Supplemental Restraint System, Removal and Installation).

23. Remove the C-Pillar side impact sensor.
For additional information, refer to: C-Pillar Side Impact Sensor (501-20B Supplemental Restraint System, Removal and Installation).

24. Remove the wiring harness from the B-Pillar.

25. Release the wiring harness from the rocker panel.

26. Release wiring harness from roof panel.

27. Remove the rocker panel outer trim.

28. Release the front and back carpet.

29. Remove rear wheel and tire.

30. Remove rear bumper cover.
For additional information, refer to: Rear Bumper Cover (501-19 Bumpers, Removal and Installation).

31. Remove forced air extraction grille.

32. R/H side: Remove fuel tank.
For additional information, refer to: Fuel Tank (310-01A Fuel Tank and Lines - TDV6 2.7L Diesel, Removal and Installation).

33. R/H side: Remove the fuel tank filler pipe.
For additional information, refer to: Fuel Tank Filler Pipe (310-01A Fuel Tank and Lines - TDV6 2.7L Diesel, Removal and Installation).

34. R/H side: Remove the fuel filler interlock catch.
For additional information, refer to: Fuel Filler Interlock Catch (501-03 Body Closures, Removal and Installation).

35. Remove the rear quarter window glass.
For additional information, refer to: Rear Quarter Window Glass (501-11 Glass, Frames and Mechanisms, Removal and Installation).

36. Remove the exhaust heatshields.

37. Remove the tailgate latch.
For additional information, refer to: Liftgate Latch (501-14 Handles, Locks, Latches and Entry Systems, Removal and Installation).

38. Remove tailgate weatherstrip.

39. With assistance remove the tailgate.

40. Remove the load space trims.

41. Remove the load space carpets.

42. Release wiring harness.

mcx30.com

43.

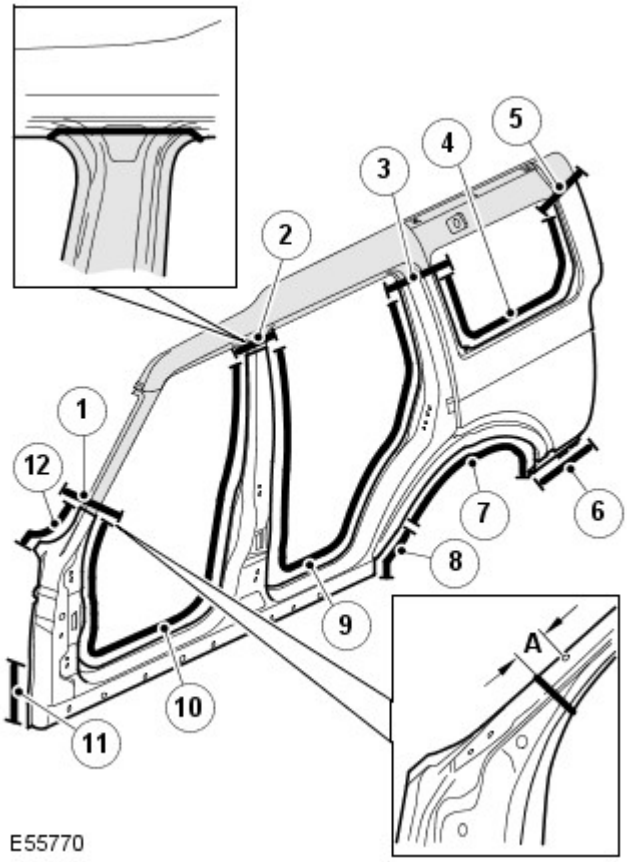

Item	Part Number	Description
A	-	Cut line is 55mm (2.165 inches) from A-Pillar trim hole.
1	-	Butt weld.
2	-	Cut line and butt weld.
3	-	Butt weld.
4	-	50 spot welds.
5	-	Butt weld.
6	-	5 spot welds.
7	-	40 spot welds.
8	-	9 spot welds.
9	-	100 spot welds.
10	-	98 spot welds.
11	-	8 spot welds.
12	-	15 spot welds.

mcx30.com

44.

Item	Part Number	Description
1	-	22 plug welds.
2	-	3 plug welds.
3	-	38 plug welds.
4	-	4 plug welds.
5	-	10 plug welds.
6	-	6 plug welds.
7	-	13 plug welds.
8	-	6 plug welds.

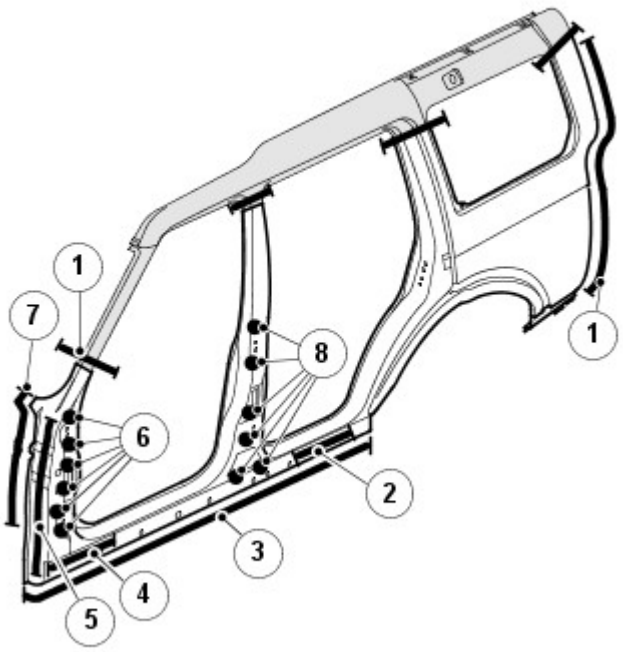

E57699

45.

Item	Part Number	Description
1	-	Areas of adhesive.
2	-	Acoustic seal.
3	-	Acoustic seals.
4	-	Acoustic seal.
5	-	Acoustic seal.

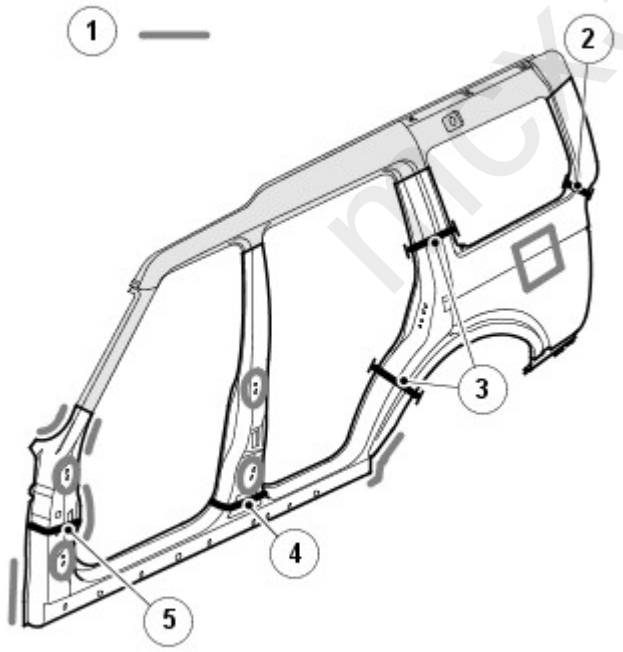

E57700

46. For additional information:

- Welding.
  For additional information, refer to: Body Repairs (501-25A Body Repairs - General Information, Description and Operation).

mcx30.com

- Corrosion protection.
  For additional information, refer to: Corrosion Protection (501-25B, Description and Operation).
- Tolerance checks.
  For additional information, refer to: Body and Frame (501-26, Description and Operation).

Installation

1. Install is the reversal of removal.

mcx30.com

Published: 11-May-2011

Side Panel Sheet Metal Repairs - B-Pillar Outer Panel

Removal and Installation

Removal

1. Disconnect both battery cables.
   For additional information, refer to: Specifications (414-00 Battery and Charging System - General Information, Specifications).
2. Remove the rear door assembly.
   - Disconnect the electrical connector
   - Release the wiring harness grommet
   - Release the wiring harness retaining clip
   - Remove the 2 bolts

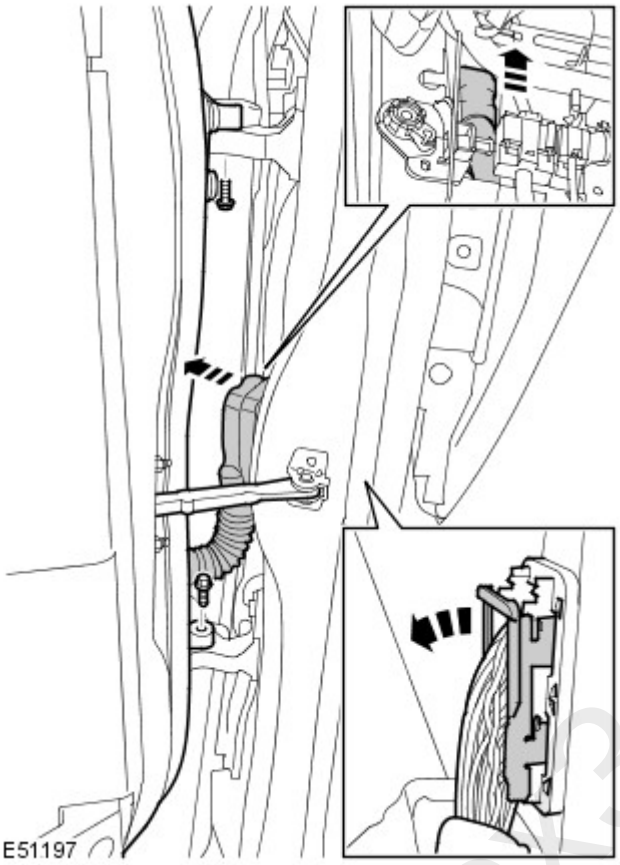

3. Remove front door striker.
4. Remove the front seat.
   For additional information, refer to: Front Seat (501-10 Seating, Removal and Installation).
5. Remove the rear seat.
   For additional information, refer to: Rear Seat - Vehicles With: 60/40 Split Seat (501-10 Seating, Removal and Installation).
6. Remove the B-pillar side impact sensor.
   For additional information, refer to: B-Pillar Side Impact Sensor (501-20B Supplemental Restraint System, Removal and Installation).
7. Remove the side air curtain module.
   For additional information, refer to: Side Air Bag Module (501-20B Supplemental Restraint System, Removal and Installation).
8. Remove the wiring harness from the B-pillar.
9. Release the wiring harness from the rocker panel.
10. Remove the front safety belt retractor.
    For additional information, refer to: Front Safety Belt Retractor (501-20A Safety Belt System, Removal and Installation).
11. Remove the rocker panel outer trim.
12. Release the carpet.

mcx30.com

13.

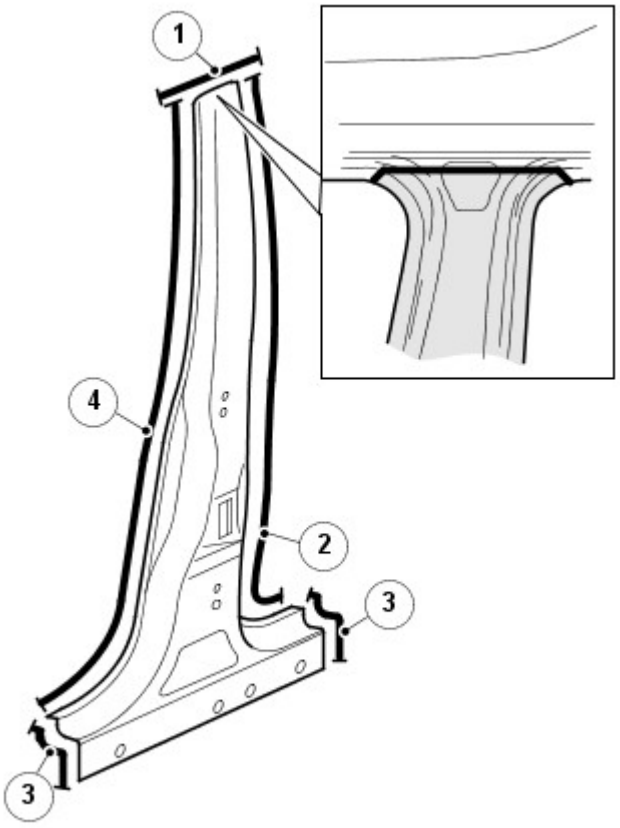

E55946

Item	Part Number	Description
1	-	Cut line and butt weld.
2,4	-	81 spot welds.
3	-	Butt welds.

14.

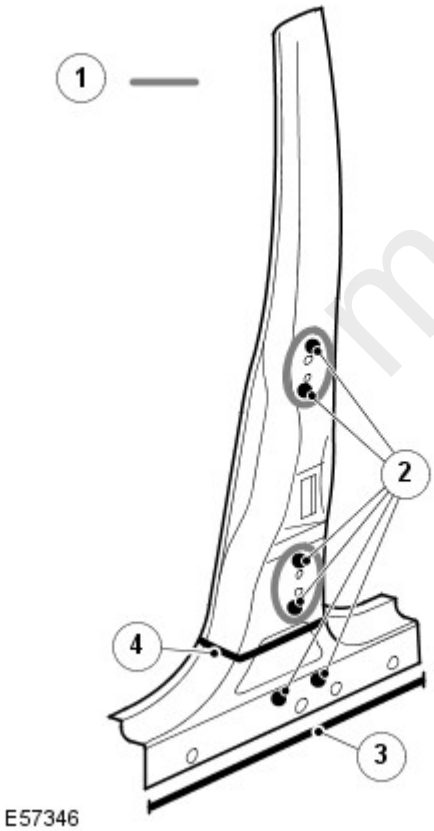

E57346

Item	Part Number	Description
1	-	Adhesive.
2	-	6 plug welds.
3	-	19 plug welds.
4	-	Acoustic seal.

15. For additional information:

- Welding.
  For additional information, refer to: Body Repairs (501-25A Body Repairs - General Information, Description and Operation).

mcx30.com

- Corrosion protection.
  For additional information, refer to: Corrosion Protection (501-25B Body Repairs - Corrosion Protection, Description and Operation).
- Tolerance checks.
  For additional information, refer to: Body and Frame (501-26 Body Repairs - Vehicle Specific Information and Tolerance Checks, Description and Operation).

Installation

1. Install is the reversal of removal.

mcx30.com

Published: 11-May-2011

Side Panel Sheet Metal Repairs - A-Pillar Reinforcement

Removal and Installation

Removal

- NOTE: In this procedure the A-Pillar reinforcement is replaced in conjunction with the A-Pillar outer panel.

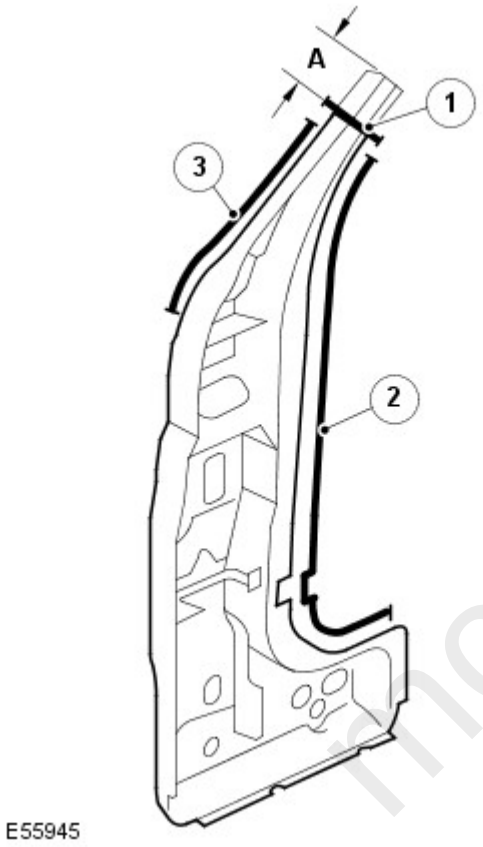

1. Disconnect both battery cables.
   For additional information, refer to: Specifications (414-00 Battery and Charging System - General Information, Specifications).
2. Remove the A-Pillar outer panel.
   For additional information, refer to: A-Pillar Outer Panel (501-29 Side Panel Sheet Metal Repairs, Removal and Installation).
3. Remove the instrument panel.
   For additional information, refer to: Instrument Panel - 2.7L Diesel (501-12, Removal and Installation).
4.

Item	Part Number	Description
A	-	Cut line 80mm (3.149 inches) from edge of A Pillar reinforcement.
1	-	Butt weld.
2	-	30 spot welds.
3	-	17 spot welds.

mcx30.com

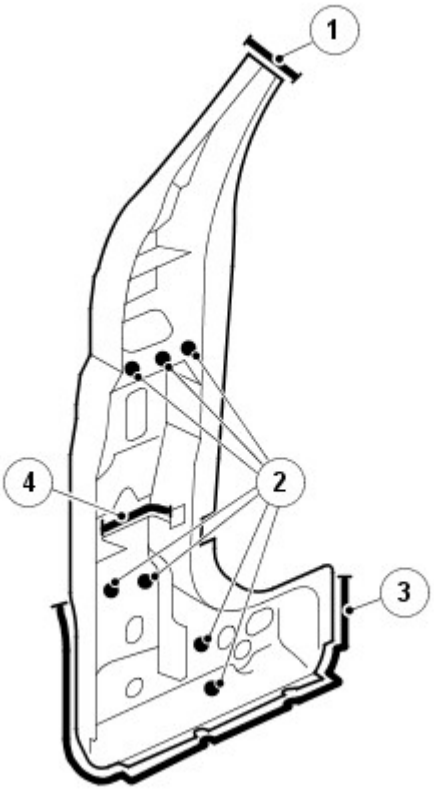

E57677

5.

Item	Part Number	Description
1	-	Butt weld
2	-	7 Plug welds.
3	-	16 plug welds.
4	-	Acoustic seal.

6. For additional information:

- Welding.
  For additional information, refer to: Body Repairs (501-25A Body Repairs - General Information, Description and Operation).
- Corrosion protection.
  For additional information, refer to: Corrosion Protection (501-25B Body Repairs - Corrosion Protection, Description and Operation).
- Tolerance checks.
  For additional information, refer to: Body and Frame (501-26 Body Repairs - Vehicle Specific Information and Tolerance Checks, Description and Operation).

Installation

1. Install is the reversal of removal.

mcx30.com

Published: 11-May-2011

Side Panel Sheet Metal Repairs - B-Pillar Reinforcement

Removal and Installation

Removal

- NOTE: In this procedure the B-Pillar reinforcement is replaced in conjunction with the B-pillar outer panel.
- NOTE: The B-Pillar closing panel is fitted with the B-Pillar reinforcement.

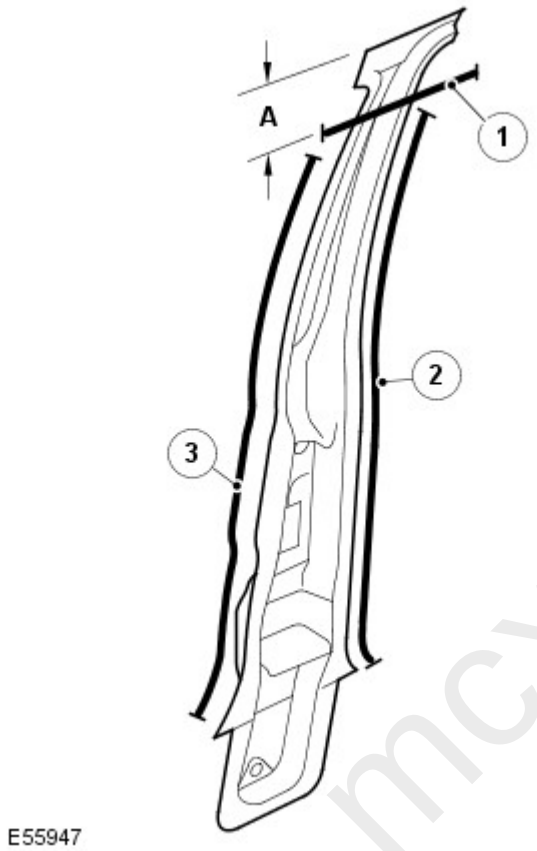

1. Disconnect both battery cables.
   For additional information, refer to: Specifications (414-00 Battery and Charging System - General Information, Specifications).
2. Remove the B-pillar outer panel.
   For additional information, refer to: B-Pillar Outer Panel (501-29 Side Panel Sheet Metal Repairs, Removal and Installation).
3.

Item	Part Number	Description
A	-	Cut line 140.0mm (5.51 inches)
1	-	Butt weld.
2,3	-	81 spot welds. (including the B-Pillar closing panel.)

mcx30.com

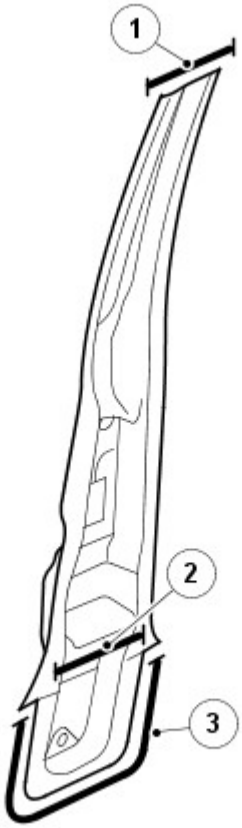

E57347

4.

Item	Part Number	Description
1	-	Butt weld.
2	-	Acoustic seal.
3	-	12 plug welds.

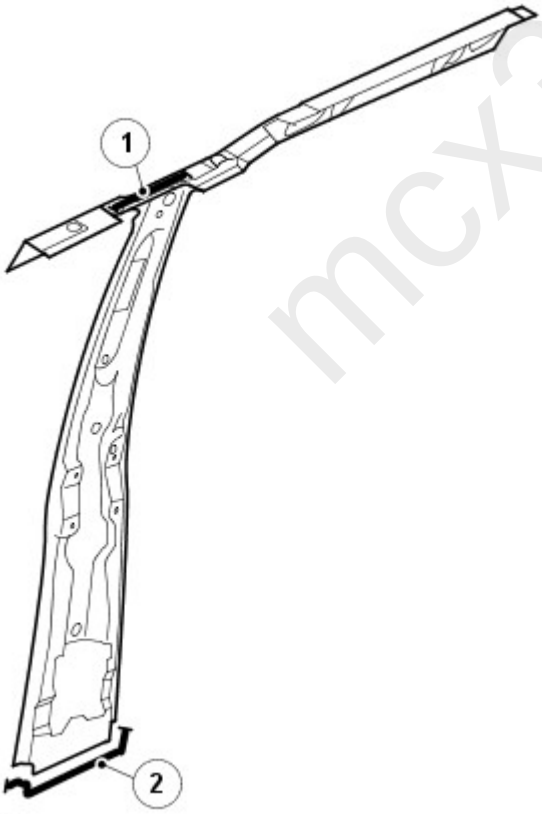

E55948

5. The B-Pillar closing panel is supplied with the cantrail. Remove the B-Pillar closing panel from the cantrail and fit the B-pillar closing panel to the B-Pillar reinforcement, as shown in graphic E55948 and E55947.

Item	Part Number	Description
1	-	9 plug welds.
2	-	4 spot welds.

6. For additional information:

- Welding.
  For additional information, refer to: Body Repairs (501-25A Body Repairs - General Information, Description and Operation).

mcx3c.com

- Corrosion protection.
  For additional information, refer to: Corrosion Protection (501-25B Body Repairs - Corrosion Protection, Description and Operation).
- Tolerance checks.
  For additional information, refer to: Body and Frame (501-26 Body Repairs - Vehicle Specific Information and Tolerance Checks, Description and Operation).

Installation

1. Install is the reversal of removal.

mcx30.com

Published: 11-May-2011

Side Panel Sheet Metal Repairs - Side Panel Front Section

Removal and Installation

Removal

1. Disconnect both battery cables.
   For additional information, refer to: Specifications (414-00 Battery and Charging System - General Information, Specifications).
2. Remove the windshield glass.
   For additional information, refer to: Windshield Glass (501-11 Glass, Frames and Mechanisms, Removal and Installation).
3. Remove the front fender.
   For additional information, refer to: Fender (501-02 Front End Body Panels, Removal and Installation).
4. L/H side: Remove the battery junction box.
   For additional information, refer to: Battery Junction Box (BJB) - TDV6 2.7L Diesel (418-00 Module Communications Network, Removal and Installation).
5. R/H side: Remove the brake booster.
   For additional information, refer to: Brake Booster (206-07, Removal and Installation).
6. R/H side: Remove the ABS module.
   For additional information, refer to: Anti-Lock Brake System (ABS) Module (206-09A Anti-Lock Control - Traction Control, Removal and Installation).
7. R/H side: Remove the accelerator pedal.
   For additional information, refer to: Accelerator Pedal (310-02A Acceleration Control - TDV6 2.7L Diesel, Removal and Installation).
8. Remove the front and rear door assemblies.
   - Disconnect the electrical connector
   - Release the wiring harness grommet
   - Release the wiring harness retaining clip
   - Remove the 2 bolts

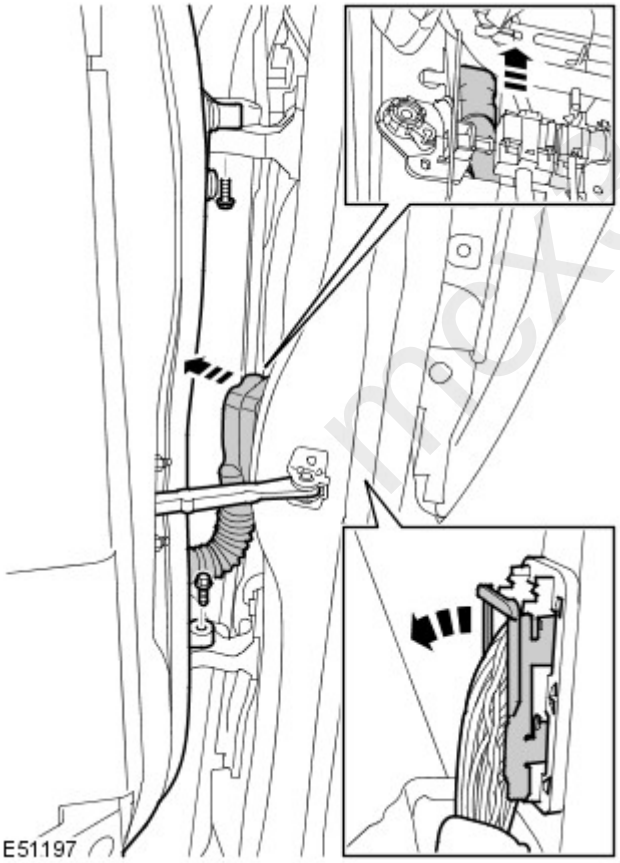

9. Remove front door striker.
10. Remove the insulation from the outer and inner bulkhead.
11. Remove the front and rear door weatherstrip.
12. Remove the footrest.
13. Release the A-Pillar wiring harness.
14. Remove the front safety belt retractor.
    For additional information, refer to: Front Safety Belt Retractor

(501-20A Safety Belt System, Removal and Installation).

15. Remove the B-Pillar side impact sensor.
For additional information, refer to: B-Pillar Side Impact Sensor (501-20B Supplemental Restraint System, Removal and Installation).

16. Remove the side air curtain module.
For additional information, refer to: Side Air Bag Module (501-20B Supplemental Restraint System, Removal and Installation).

17. Remove the front seat.
For additional information, refer to: Front Seat (501-10 Seating, Removal and Installation).

18. Remove the rear seat.
For additional information, refer to: Rear Seat - Vehicles With: 60/40 Split Seat (501-10 Seating, Removal and Installation).

19. Remove the wiring harness from the B-Pillar.

20. Release the wiring harness from the rocker panel.

21. Release wiring harness from roof panel.

22. Remove the rocker panel outer trim.

23. Release the front and back carpet.

24.

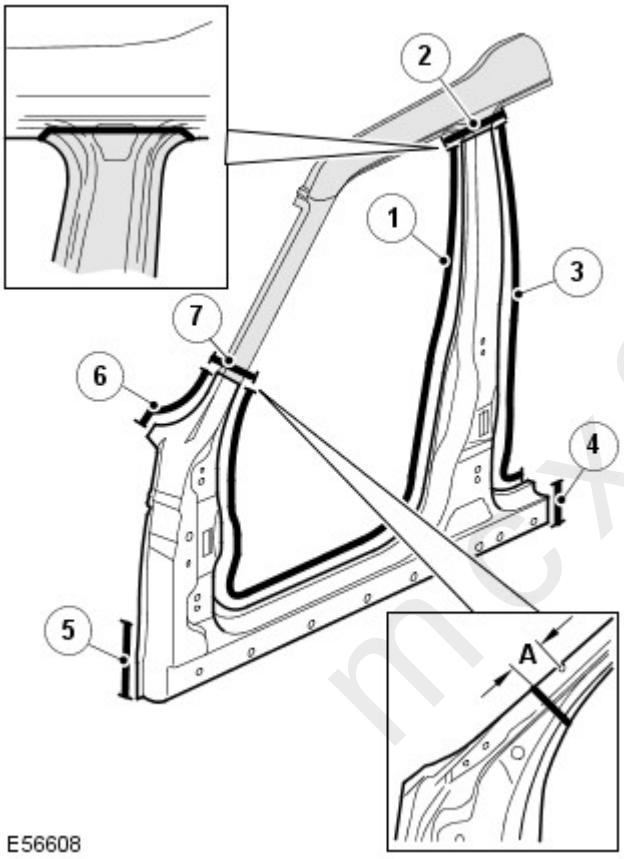

Item	Part Number	Description
A	-	Cut line is 55 mm (2.165 inches) from A-Pillar trim hole.
1	-	98 spot welds.
2	-	Butt weld.
3	-	80 spot welds.
4	-	Butt weld.
5	-	8 spot welds.
6	-	15 spot welds.
7	-	Butt weld.

mcx30

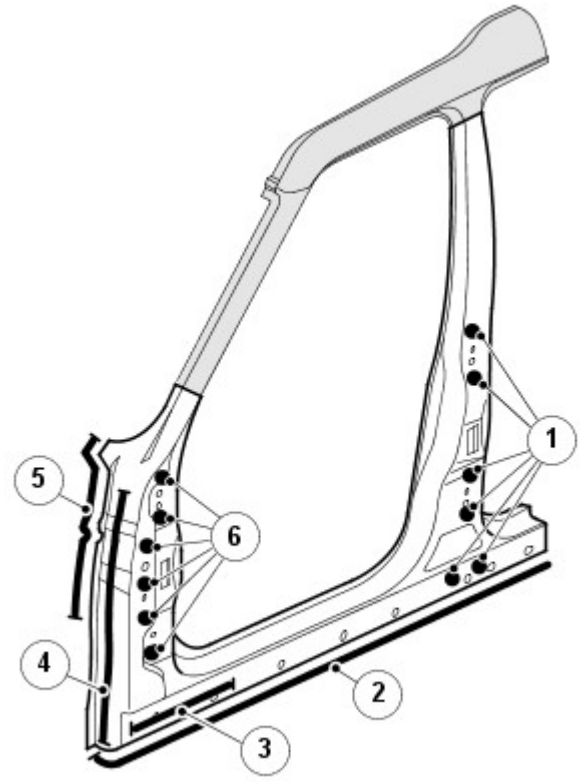

E57174

25.

Item	Part Number	Description
1	-	6 plug welds.
2	-	31 plug welds.
3	-	4 plug welds.
4	-	10 plug welds.
5	-	13 plug welds.
6	-	6 plug welds.

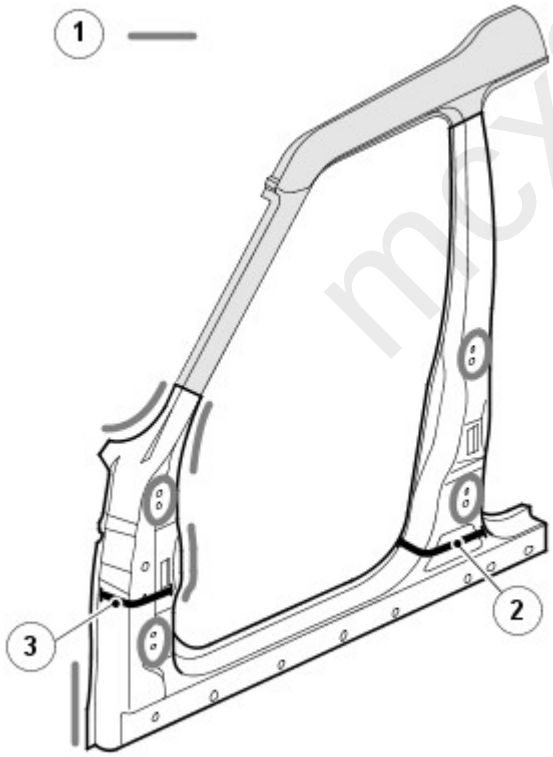

E57175

26.

Item	Part Number	Description
1	-	Areas of adhesive.
2	-	Acoustic seal.
3	-	Acoustic seal.

27. For additional information:

- Welding.
  For additional information, refer to: Body Repairs (501-25A Body Repairs - General Information, Description and Operation).

mcx30.com

- Corrosion protection.
  For additional information, refer to: Corrosion Protection (501-25B Body Repairs - Corrosion Protection, Description and Operation).
- Tolerance checks.
  For additional information, refer to: Body and Frame (501-26 Body Repairs - Vehicle Specific Information and Tolerance Checks, Description and Operation).

Installation

1. Install is the reversal of removal.

mcx30.com